
WIŚNIOWSKI
Steel and aluminium
DOORS | WINDOWS | FAÇADES












We have been at the cutting edge of modern construction since 1989. Thanks to a visionary concept of the owner, Andrzej Wiśniowski, ever since its inception, the WIŚNIOWSKI brand has been introducing innovative technological solutions and highest quality materials to ensure customer safety and comfort. Numerous certificates issued by accredited bodies and awards granted annually by the sector's experts, as well as those received thanks to the opinions of WIŚNIOWSKI product users, confirm that we keep our promises. We use a Certified Integrated Management System created on the basis of the PN-EN ISO 9001:2008 Quality Standard and the OHSAS 18001:2007 Occupational Hygiene and Safety Standard. It is our commitment to strive for process and product excellence and a testament to product liability for the entire duration of its life.



STEEL AND ALUMINIUM

DOORS | **WINDOWS** | **FAÇADES**

GENERAL OVERVIEW	4 – 9
DOORS	10 – 37
WINDOWS	38 – 47
WALLS	48 – 49
FAÇADES	50 – 59
CREO, DECO	60 – 65
COLOURS, ACCESSORIES, EXAMPLES	66 – 73
REFERENCE BUILDINGS	74 – 101

www.wisniowski.com

Fusing professionalism and innovative concepts

Perfecting products is one of the major principles of the WIŚNIOWSKI brand. When close cooperation with customers is combined with innovative concepts of the designers, optimal solutions perfectly tailored to individual needs are born.

The WIŚNIOWSKI team is made up of professionals, engineers, and experts in technology, economics, and trade. Their knowledge and experience are the pillar of the company's reliability and strength. We fuse their top qualifications with effective application of modern technologies.

This ensures constant development, improvement of the technological functionality of our products, and compliance with norms and standards.

The high quality of WIŚNIOWSKI products is confirmed by the CE mark, as well as certificates and attestations of various institutes and organizations we cooperate with.

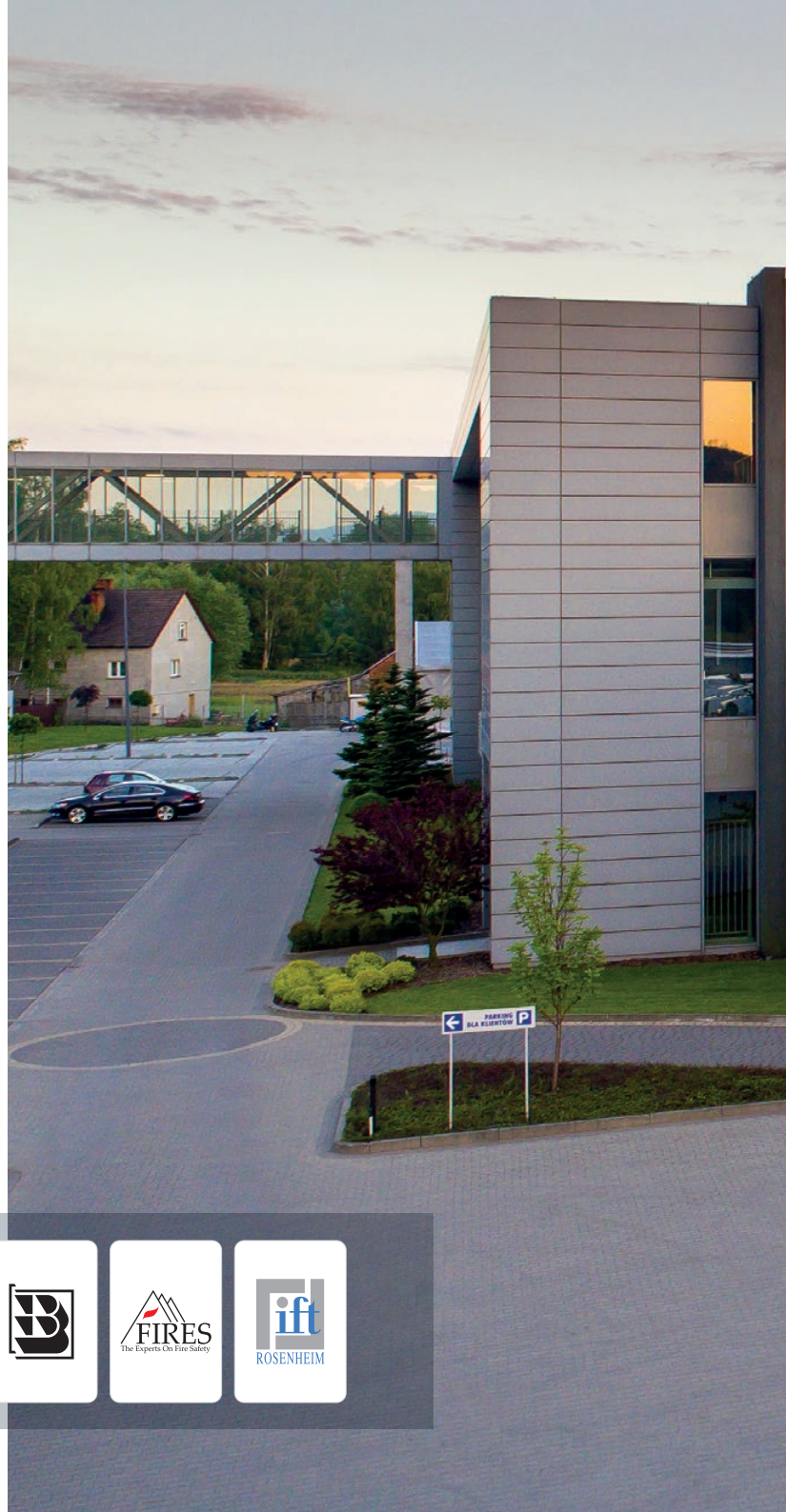


WIŚNIOWSKI
BRAMY | DRZWI | OGRODZENIA
AWIZACJA
REJESTRACJA

A higher level of cooperation

WIŚNIOWSKI products have been chosen by hundreds of companies in Poland and abroad. Our experience allows us to independently and professionally match solutions to various buildings, such as: public utility buildings, residential, commercial, and manufacturing buildings, as well as hotels, but also to assist throughout the whole investment process or any of its stages, depending on the needs of the investor.

We focus on providing comprehensive services to our customers, which can be achieved among others thanks to our qualified team of employees. WIŚNIOWSKI can design, prepare, and execute any project involving aluminium or steel joinery elements. We also ensure personal consulting and technical support.

BIM WIŚNIOWSKI
BIM | CAD LIBRARIES

Check out our garage door, door, and fence library in the BIM technology available at **bim.wisniowski.pl/en/**

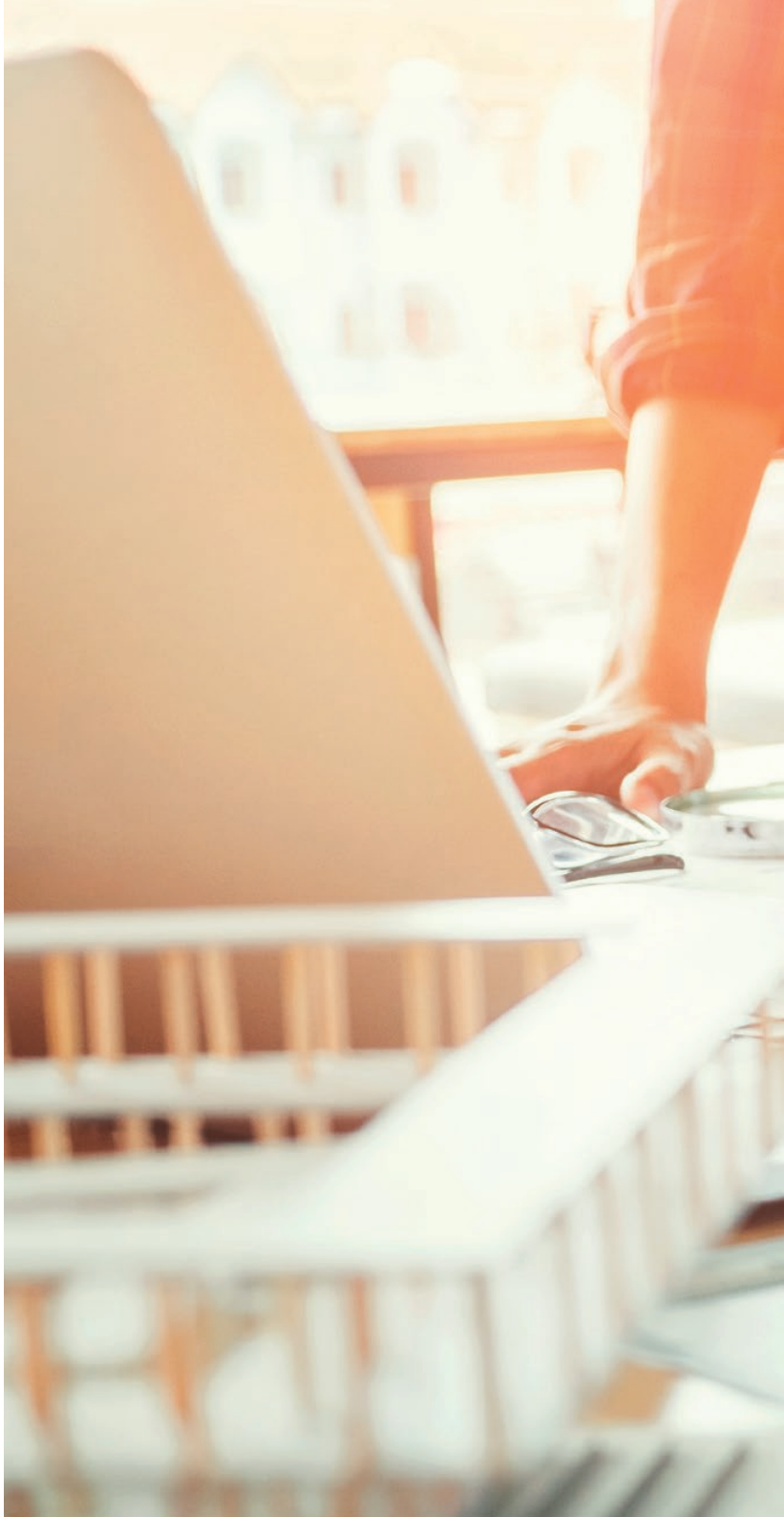



Steel and aluminium joinery solutions in modern architecture

WIŚNIOWSKI is a perfect choice for all those who value originality and seek limitless possibilities when choosing their solutions. A large selection of forms, dimensions, colours, glazings, hardware, and accessories lets you customize the door to match your needs. Ideal for hotels, apartments, public buildings, and multifamily residential housing.





Exquisite **manufacturing**

Unlimited **possibilities**

WIŚNIOWSKI **doors**

WIŚNIOWSKI doors are designed to make full use of the characteristics of the materials they are made of. The use of advanced technology and smart electronics adapts our range to the ever increasing requirements of modern architecture.

A wide range of versions lets us match the doors to any type of building and even the most extreme conditions of use. We manufacture external and internal, single-leaf and double-leaf doors, automatic, sliding, and swing doors.

The high resistance parameters of our doors are achieved thanks to the application of special door profile joining methods. Combined with materials of the highest grade, the doors provide a solid and durable structure resistant to physical factors and the weather.







Aluminium doors

The highest quality comes standard

BURGLAR PROTECTION

FIRE RESISTANCE

SMOKE CONTROL

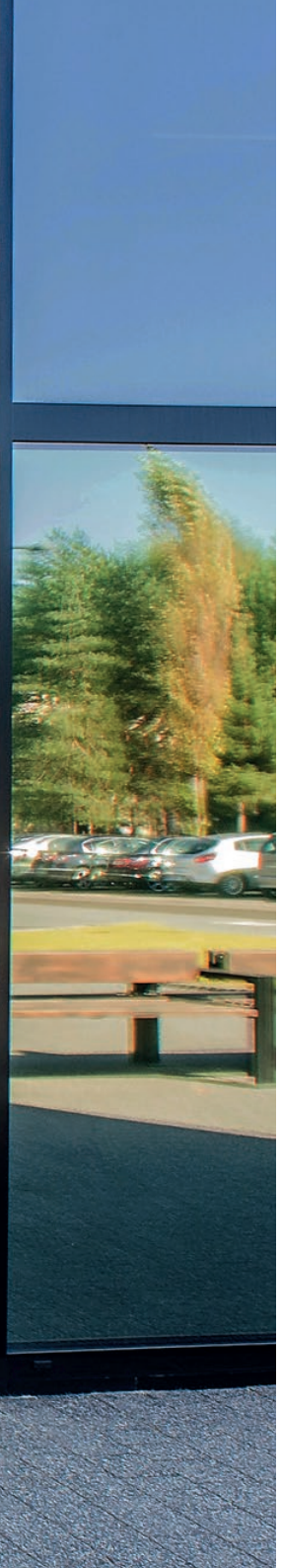

Aluminium **external doors**

- made with the use of the ALUPROF aluminium profile system with a thermal break: MB-60, MB-60E, MB-70, MB-70HI, MB-86ST, MB-86SI+, MB-86AERO, MB-104 Passive SI+, MB-104 Passive AERO;
- single-leaf or double-leaf;
- leaf infill: glazing unit or panel;
- right-hand or left-hand doors, inswing or outswing;
- frame and leaf powder coated with RAL palette colours, in DECOR colours or film coated;
- available in the RC2 anti-burglary class with the MB-60 system, as well as the RC3 class with the MB-70, MB-70HI, MB-86ST, MB-86SI+, and MB-86AERO systems in accordance with PN-EN 1627;
- standard accessories: Jupiter handles, surface hinges, rebate gaskets around the entire circumference of the leaf and the frame, three-point lock with a lock cylinder, threshold with thermal insulation;
- broad range of optional accessories;



MB-60



MB-60E

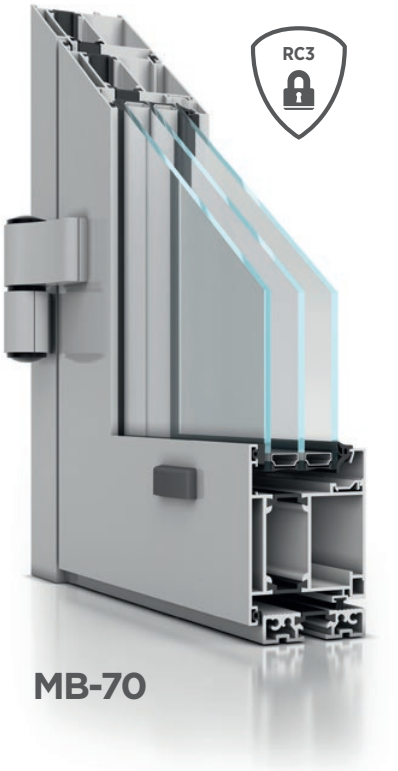

MB-70

Aluminium **external doors**





MB-104 Passive SI+



MB-104 Passive AERO

Plus Line series aluminium doors

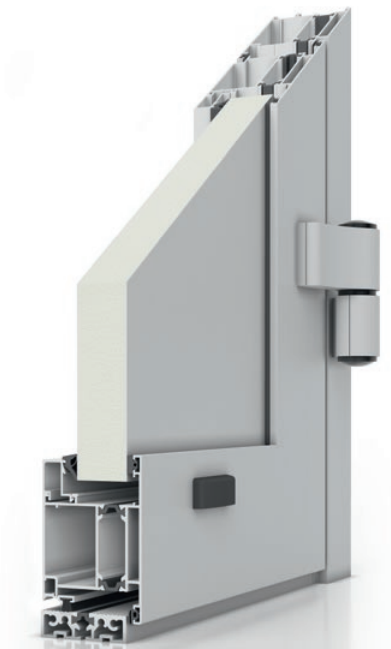

MB-60E Plus Line



MB-70 Plus Line

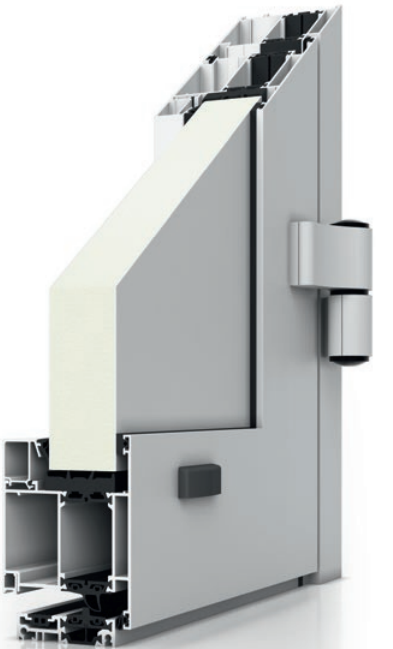

MB-86 ST Plus Line

Aluminium **internal doors**

- made with the use of the ALUPROF MB-45 aluminium profile system without a thermal break;
- single-leaf or double-leaf;
- leaf infill: a single glass pane, glazing unit or panel,
- frame and leaf powder coated with RAL palette colours, in DECOR colours or film coated;
- available as hand operated or automatic sliding doors;
- also available in the MB-45D class S_m, S_a smoke control version in accordance with PN-EN 13501-2+A1;
- standard accessories: Jupiter handle, surface hinges, single-point lock with lock cylinder, rebate gaskets around the entire circumference of the leaf and the frame;
- broad range of optional accessories;



MB-45
with a threshold

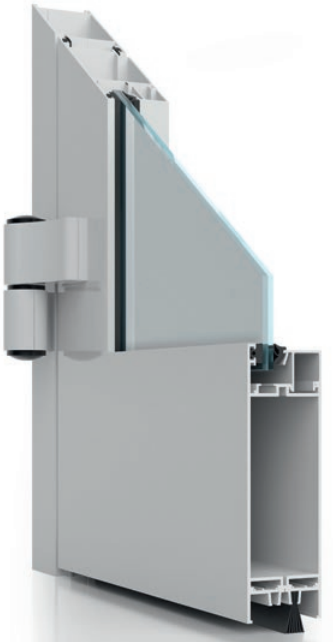

MB-45
without a threshold

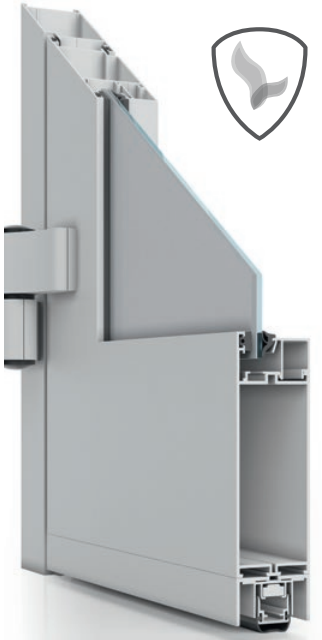

MB-45D
with a drop-down seal

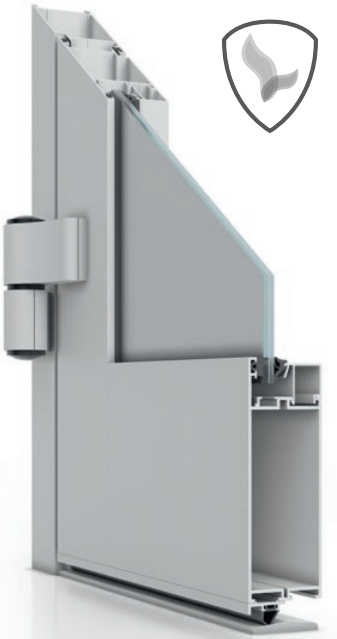

MB-45D
with a gasket and a low threshold

Aluminium **fire-rated doors**

- made with the use of the ALUPROF aluminium profile system with a thermal break: MB-78 EI, MB-60E EI;
- designs based on the MB-60E EI system feature the EI15 or EI30 fire resistance class in accordance with the PN-EN 13501-2+A1 standard. The doors can also meet class S_m, S_a smoke control requirements in accordance with PN-EN 13501-2+A1 and can be used in escape routes;
- designs based on the MB-78 EI system feature the EI15, EI30, EI45 or EI60 fire resistance class in accordance with the PN-EN 13501-2 standard. The doors can also meet class S_m, S_{200} smoke control requirements in accordance with PN-EN 13501-2 and can be used in escape routes;
- fire-rated partitions with single-leaf or double-leaf doors are available;
- leaf infill: single fire-rated glass pane, fire-rated glazing unit or panel with appropriate fire rating;
- standard accessories: single mortise lever lock with a lock cylinder, stainless steel handle, door closer, anti-burglary bolts, rebate gaskets around the entire circumference of the leaf and the frame;
- frame and leaf powder coated with any RAL palette colour or in DECOR colours;
- broad range of optional accessories;

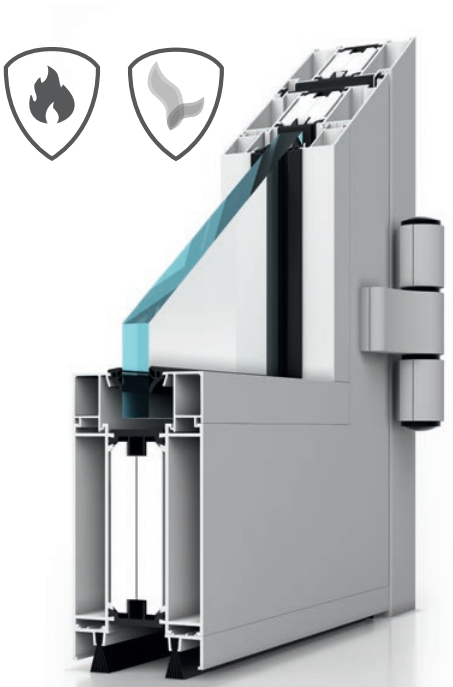

MB-78 EI30

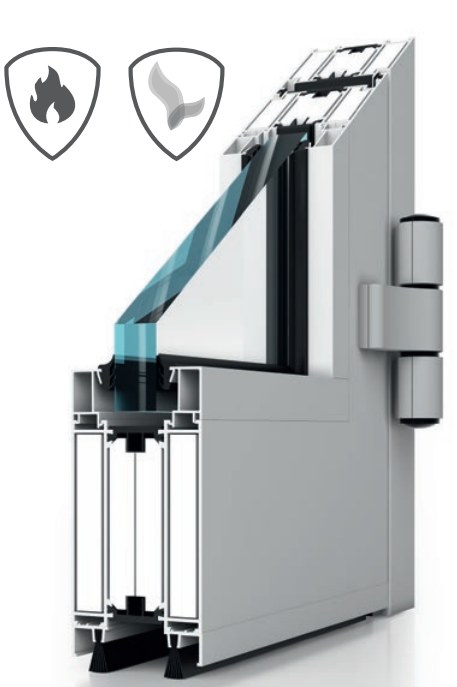

MB-78 EI60

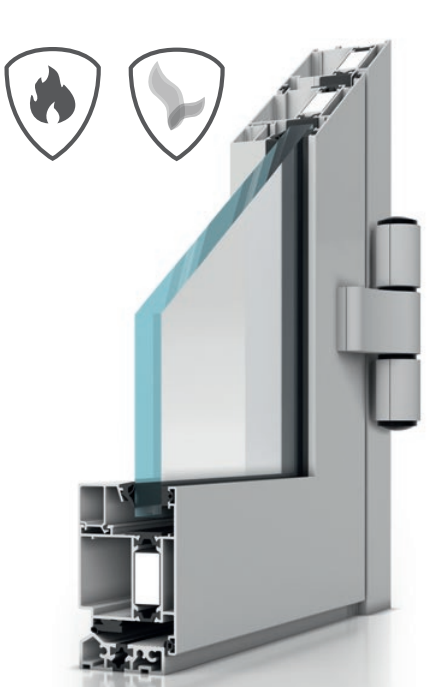

MB-60E EI30


HAK
ŚR - PN
10:00 - 15:00
15:30 - 18:00



Steel profile doors
Durability and safety

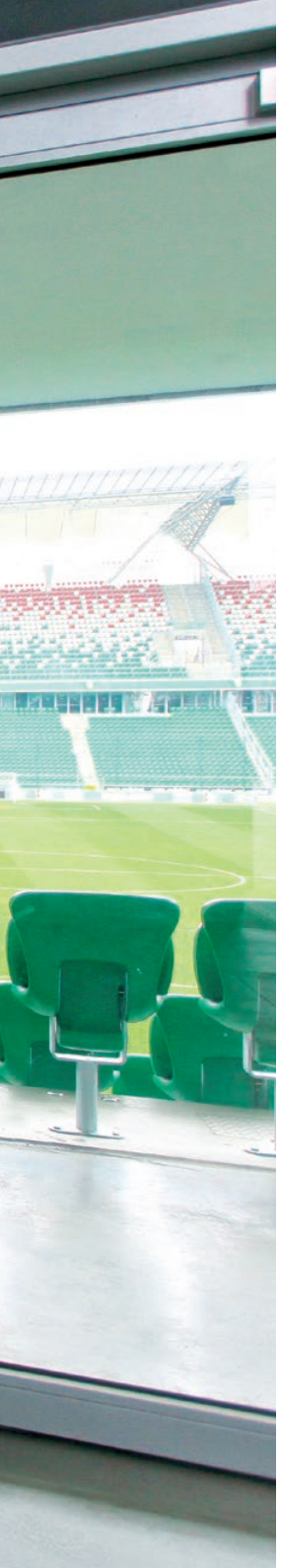

Steel **external doors**

- made of JANSEN Janisol, FORSTER Unico, FORSTER Unico HI steel profiles with a thermal break;
- frame and leaf made of superior quality steel sections with a thermal break with partition thickness of 1.5 to 2 mm,
- infill: safety glazing unit or panel;
- welded design, welded joints are ground and then abrasion-blasted for corrosion protection before painting;
- leaf frame and opening frame are powder coated with primer and topcoat in any RAL palette colour or RAL mat structure colour;
- standard accessories: three-point lock with class 6.D lock cylinder, Jupiter handle, steel hinges with bearings, JANSEN Janisol – 22.5 mm high threshold, 6 mm to be embedded in the floor, hopper gaskets around the entire circumference of the leaf and frame with the exception of the threshold, FORSTER Unico – plastic threshold 21 mm high;
- broad range of optional accessories;



JANSEN Janisol



FORSTER Unico



FORSTER Unico HI

Steel **doors without a thermal break**

- made with the use of the JANSEN Economy 50 and FORSTER Presto steel profile system without a thermal break;
- frame and leaf made of superior quality single-channel steel sections without a thermal break with a section wall with the thickness of 1.5 to 2 mm;
- infill: single safety glass pane, glazing unit or panel;
- welded design, welded joints are ground and then abrasion-blasted for corrosion protection before painting;
- leaf frame and opening frame are powder coated with primer and topcoat in any RAL palette colour or RAL mat structure colour;
- standard accessories: flush-mounted mortise lever lock with lock cylinder, Jupiter handle, steel hinges with bearings, threshold made of 20x40 mm section, hopper gaskets around the entire circumference of the leaf and the frame with the exception of the threshold;
- broad range of optional accessories;



JANSEN Economy 50



FORSTER Presto



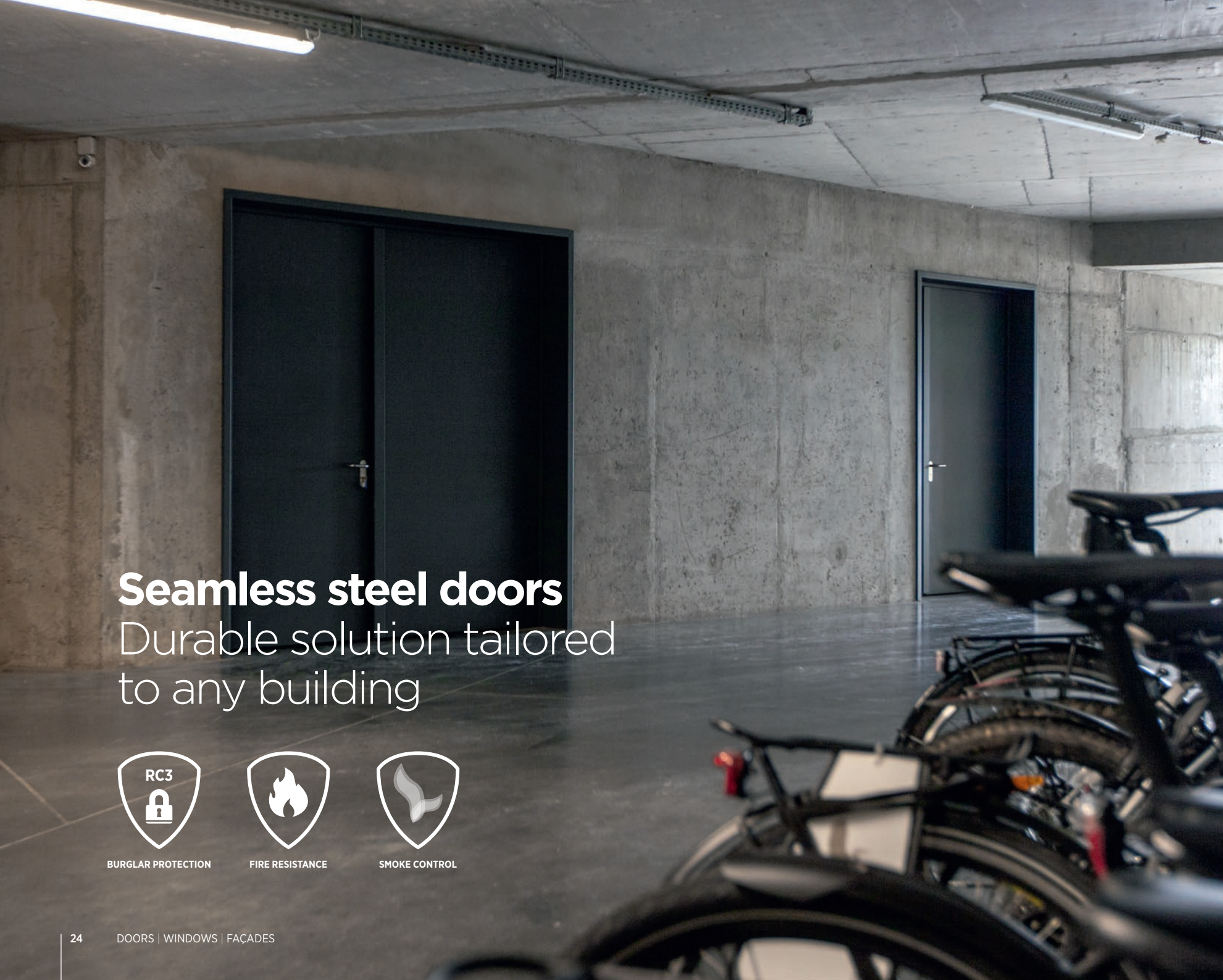

Seamless steel doors
Durable solution tailored to any building

BURGLAR PROTECTION

FIRE RESISTANCE

SMOKE CONTROL



Seamless **steel doors**

- **ECO TECH** single-leaf doors;
- solid or partially glazed leaf;
- leaf with a thick rebate, made of galvanized steel sheet 1.0 mm thick with powder coating;
- door frame made of steel sections formed from 1.5 mm thick galvanized sheets with powder coating;
- total leaf thickness is 78 mm;
- leaf infill for external doors: mineral wool;
- standard accessories: one mortise lever lock with a lock cylinder, black plastic handle with the WIŚNIOWSKI logo, door leaf with three 3D hinges, corner frame, EPDM rebate gaskets, drop-down seal and drip cap;
- broad range of optional accessories;



smartCONNECTED

The smartCONNECTED technology integrates WIŚNIOWSKI products with the smart home system and lets you control them from your phone.

Seamless **steel doors**

- single- or double-leaf **ECO** doors with the passive leaf of the double-leaf doors locked with an automatic latch;
- solid or partially glazed leaf with sidelights and a toplight;
- leaf with a thin rebate, made of a galvanized steel sheet 0.5 to 1.5 mm thick with polyester coating or powder coating;
- door frame made of steel sections formed from 1.2 mm thick galvanized sheets with powder coating;
- total leaf thickness is 62.5 ± 1 mm;
- leaf infill in external doors: expanded polystyrene (EPS); in custom version: mineral wool;
- leaf infill in internal doors: cellular cardboard;
- standard accessories: one mortise lever lock with a lock cylinder, black plastic handle with the WIŚNIOWSKI logo, door leaf with two vertically adjusted hinges, one of the hinges featuring a pull spring, corner frame, external doors fitted with an anti-burglary bolt, EPDM rebate gaskets;
- broad range of optional accessories;



ECO
internal



ECO
external

- single-leaf **ECO BASIC** doors;
- solid or partially glazed leaf;
- leaf with a thick rebate, made of galvanized steel sheet 0.5 mm thick with polyester coating or powder coating;
- door frame made of steel sections formed from 1.2 mm thick galvanized sheets with powder coating;
- total leaf thickness is 40 ± 1 mm;
- leaf infill in external doors: expanded polystyrene (EPS); in custom version (painted leaf): mineral wool;
- leaf infill in internal doors: cellular cardboard;
- standard accessories: one mortise lever lock with a lock cylinder, black plastic handle with the WIŚNIOWSKI logo, door leaf with two horizontally adjusted hinges, corner frame, EPDM rebate gaskets;
- broad range of optional accessories;



ECO BASIC
external

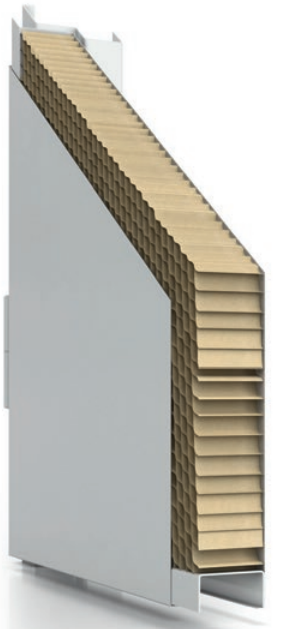

ECO BASIC
internal

Seamless **steel doors**

- single-leaf **ECO BASIC UNI** doors;
- solid leaf;
- leaf with a four-side thin rebate, made of two 0.5 mm thick galvanized steel sheets with polyester coating and protective film;
- door frame is made of steel sections formed from 1.2 mm thick galvanized steel sheet sections with polyester coating and protective film in a colour matching the door leaf, opening frame ready for DIY assembly;
- total leaf thickness is 40 ± 1 mm;
- leaf infill: expanded polystyrene (EPS);
- the doors can be installed for left-hand or right-hand opening;
- standard accessories: one mortise lever lock with a lock cylinder, black plastic handle, door leaf with two three-leaf hinges, corner frame, EPDM rebate gaskets;



ECO BASIC UNI



Fire-rated **seamless steel doors**

- single-leaf (small up to 1,110 x 2,235 mm and large up to 1,360 x 2,550 mm) or double-leaf (small up to 2,140 x 2,235 mm and large up to 2,640 x 2,550 mm);
- EI30 and EI60 fire rating;
- solid or partially glazed leaf;
- leaf with a thin rebate, made of a galvanized steel sheet 0.7-0.75 mm thick with polyester coating or powder coating or wood effect film coating;
- door frame made of steel sections formed from 1.5 mm thick galvanized sheets with powder coating;
- total leaf thickness is 62.5 ± 1 mm;
- leaf infill: mineral wool;
- rebate gaskets made of modified EPDM, additionally with an intumescent gasket;
- standard accessories: mortise lever lock, lock cylinder, anti-burglary bolts, steel core polypropylene handle with the WIŚNIOWSKI logo, door leaf is fitted with vertically adjusted hinges (including one self-closing hinge);
- small doors are available with the RC2 or RC3 anti-burglary class in accordance with PN-ENV 1627;
- available in a smoke control version with a drop-down seal in the S_a, S_{200} class in accordance with the PN-EN 13501-2 standard;
- broad range of optional accessories;



AW DS EI30



AW DS EI60

Anti-burglary **fire-rated seamless steel doors**

- single-leaf **MultiSecure EI30** doors;
- solid or partially glazed leaf;
- fire-rated version (EI30);
- fire-rated and anti-burglary version (EI30, RC2 or RC3);
- RC2 – inswing, RC3 – outswing in accordance with PN-EN 1627;
- leaf with a thick rebate, made of a galvanized steel sheet 0.5-0.6 mm thick with polyester coating or powder coating or wood effect film coating;
- opening frame made of steel sections formed from 1.2-1.5 mm thick galvanized sheets with powder coating;
- total leaf thickness is 41 ± 1 mm;
- leaf infilled with mineral wool;
- available in a smoke control version with a drop-down seal in the S_m, S_a class in accordance with PN-EN 13501-2+A1;
- sound insulation PN-EN ISO 10140-2:2011 Rw=29 (-2,-4) dB;
- standard accessories: three-point automatic lock with class B lock cylinder, three anti-burglary bolts, stainless steel handle with a long cover plate, rail door closer, 3D hinges adjustable in three planes, rebate gaskets made of modified EPDM and an intumescent gasket with a cross-section of 2 x 20 mm, external doors feature a drop-down seal and a drip cap;
- broad range of optional accessories;



MultiSecure EI30



Panel aluminium doors

A practical solution for the building sector



Aluminium **panel doors**

- **DoorTherm 86** made with the use of the ALUPROF MB-86ST aluminium profile system with a thermal break;
- single-leaf or double-leaf;
- leaf frame and opening frame made of 77 mm deep three-chamber aluminium sections with a thermal break;
- leaf infilled with a 60 mm steel panel (with high ribs or without ribs) thermally insulated with polyurethane foam, external panel structure similar to the UniTherm sectional garage doors, an additional sealing sheet matching the internal colour of the leaf profiles is installed on the inside;
- frame and leaf powder coated with RAL palette colours or film coated;
- standard accessories: Jupiter handle in stainless steel colour, three-point lock with a lock cylinder, surface hinges, rebate gaskets around the circumference of the leaf and the frame, infill installed with glazing gaskets and glazing strips;
- broad range of optional accessories;

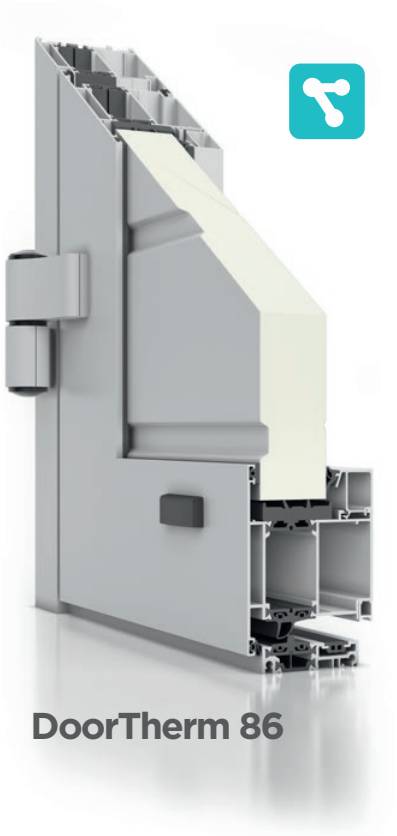

DoorTherm 86

smartCONNECTED

The smartCONNECTED technology integrates WIŚNIOWSKI products with the smart home system and lets you control them from your phone.

Aluminium **panel doors**

- **The DoorPro 70** and **DoorPro 70 RC** are made with the use of the ALUPROF MB-70 aluminium profile system with a thermal break;
- single- and double-leaf, the DoorPro 70RC model is only available as a double-leaf version with the RC3/SKG*** anti-burglary class;
- leaf frame and opening frame made of 70 mm deep three-chamber aluminium sections with a thermal break;
- leaf infilled with a 40 mm steel panel (with ribs: low, caisson, high or without ribs) thermally insulated with polyurethane foam, internal and external panel structure similar to the UniPro sectional garage doors, the DoorPro 70RC model features an additional sheet, sealing and reinforcing the leaf lining, matching the colour of the door;
- frame and leaf powder coated with RAL palette colours or film coated;
- standard accessories for the version without the anti-burglary class: Jupiter handle in stainless steel colour, three-point lock with a lock cylinder, surface hinges, rebate gaskets around the circumference of the leaf and the frame, infill installed with glazing gaskets and glazing strips;
- accessories for doors with the RC3/SKG*** anti-burglary class: three-point lock with integrated steel hooks and bolts, DOM SKG*** anti-burglary lock cylinder, Liverpool SKG*** handle, three anti-burglary bolts per leaf, 4 roller hinges per leaf, central deadbolt;
- broad range of optional accessories;

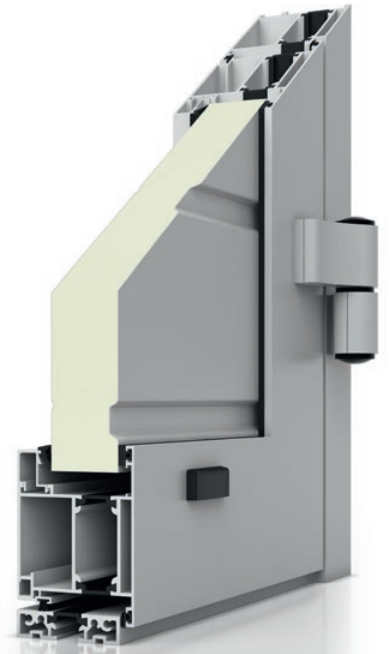

DoorPro 70

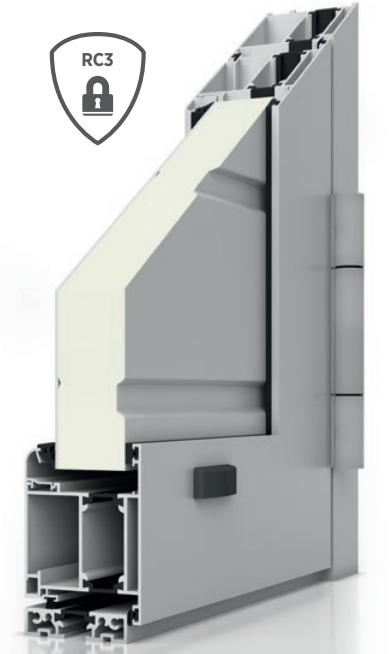

DoorPro70 RC

- **The DoorPro 60** doors are made with the use of the ALUPROF MB-60E aluminium profile system with a thermal break;
- single-leaf or double-leaf;
- leaf frame and opening frame made of 60 mm deep three-chamber aluminium sections with a thermal break;
- the leaf is infilled with a 40 mm steel panel (with ribs: low, caisson, high or without ribs) thermally insulated with polyurethane foam, internal and external panel structure as in the UniPro sectional garage doors;
- frame and leaf powder coated with RAL palette colours or film coated;
- standard accessories: Jupiter handle in stainless steel colour, three-point lock with a lock cylinder, surface hinges, rebate gaskets around the circumference of the leaf and the frame, infill installed with glazing gaskets and glazing strips;
- broad range of optional accessories;

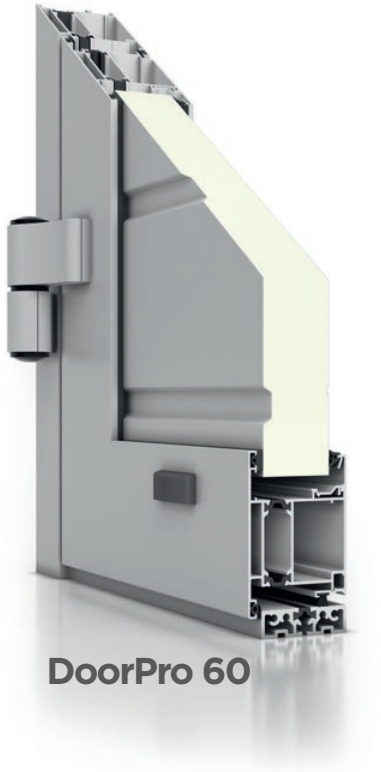

DoorPro 60



Aluminium **panel doors**

- **The DoorPro 45** doors are made with the use of the AW45 aluminium profile system without a thermal break;
- single-leaf or double-leaf;
- leaf frame and opening frame are made of 45 mm deep single-chamber aluminium sections without a thermal break;
- the leaf is infilled with a 40 mm steel panel (with ribs: low, caisson, high or without ribs) thermally insulated with polyurethane foam, internal and external panel structure as in the UniPro sectional garage doors;
- frame and leaf powder coated with RAL palette colours or film coated;
- standard accessories: Jupiter handle in stainless steel colour, three-point lock with lock cylinder, groove-fitted roller hinges, rebate gaskets around the circumference of the leaf and the frame;
- broad range of optional accessories;



DoorPro 45

- **The DoorLight 45** doors are made with the use of the ALUPROF MB 45 aluminium profile system without a thermal break;
- single-leaf or double-leaf;
- leaf frame and opening frame are made of 45 mm deep single-chamber aluminium sections without a thermal break;
- leaf infilled with the AW77 or AW 100 aluminium profile, infilled with polyurethane foam, an additional sealing sheet mounted on the inside;
- frame and leaf powder coated in RAL palette colours, infilled with aluminium profiles formed from ready sheet or wet painted;
- standard accessories: Jupiter handle in stainless steel colour, one lock with a lock cylinder, surface hinges, rebate gaskets around the circumference of the leaf and the frame, infill installed with glazing gaskets and glazing strips;
- broad range of optional accessories;



DoorLight 45
AW100



DoorLight 45
AW77

WIŚNIOWSKI **windows**

WIŚNIOWSKI's opening and fixed windows can be used in all types of buildings. The multitude of variants enables a very individual approach to the design of the building façade.

Special sealing systems in the form of EPDM gaskets ensure a high degree of window tightness. In the case of non-opening versions, we use diffuser systems providing proper air filtering in the room. This solution prevents excessive humidity from building up in the room.

The technological parameters of the materials we use enable the production of even the fanciest non-standard window shapes manufactured using profile systems with and without a thermal break.

Window hardware is chosen based on the size and weight of the window. This enables smooth operation and high comfort when using WIŚNIOWSKI windows.





FUTURO external aluminium windows



MB-104 Passive AERO



MB-104 Passive SI



MB-86AERO



MB-86 SI

- made with the use of the ALUPROF MB-60, MB-70, MB-70HI, MB-86ST, MB-86SI, MB-86AERO, MB-104 Passive SI, MB-104 Passive AERO aluminium profile system with a thermal break;
- various functions and opening methods;
- frame and leaf powder coated in any RAL, RAL mat structure, and DECOR palette colour or film coated;
- EPDM seal around the entire circumference of the leaf;
- installed separately or in façades;



MB-86 ST



MB-70 HI



MB-70

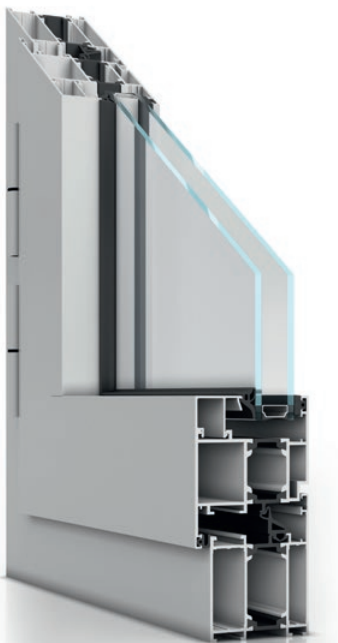

MB-60

Steel **external windows**

- made with the use of the JANSEN Janisol, Jansen Janisol Arte or FORSTER Unico (fixed window) steel profile system with a thermal break;
- various functions and opening methods;
- frame and leaf powder coated in any RAL and RAL mat structure palette colour;
- EPDM seal around the entire circumference of the leaf;
- installed separately or in façades;



JANSEN Janisol Arte

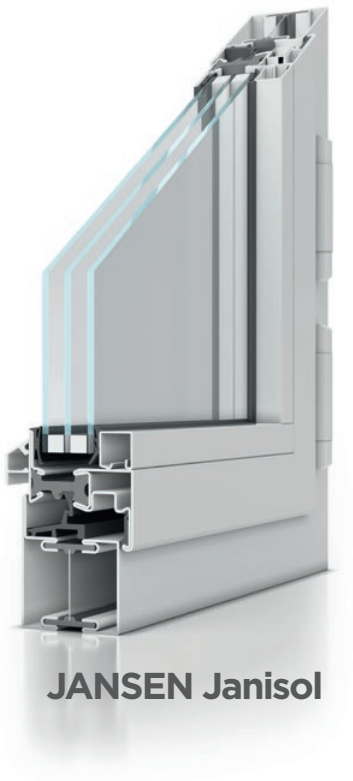

JANSEN Janisol


P
P

Aluminium and steel **windows without a thermal break**

- made with the use of the ALUPROF MB-45 aluminium profile system without a thermal break;
- made with the use of the FORSTER Presto or JANSEN Economy 50 steel profile system (fixed windows);
- fixed window infill: single glass pane, glazing unit or panel made of galvanized steel sheets with thermal insulation;
- frame and leaf powder coated in any RAL and RAL mat structure, DECOR palette colour or film coated (aluminium windows only);



MB-45



FORSTER Presto



JANSEN Economy 50

Fire-rated **aluminium windows**

- Fire-rated aluminium windows made with the use of the ALUPROF MB-78EI aluminium profile system with a thermal break: fixed and technical, with the EI30 or EI60 fire rating; frame and transoms made of 78 mm deep three-chamber aluminium sections with a thermal break for the EI30 or EI60 windows;
- leaf frame and opening frame are powder coated in any RAL or RAL mat structure palette colour;
- infill: fire-rated single glass pane, glazing unit or panel;
- can be installed in continuous systems of fire-rated partitions;

FIRE RESISTANCE





FUTURO
lift and slide patio doors
Stylish and practical solutions

smart
CONNECTED

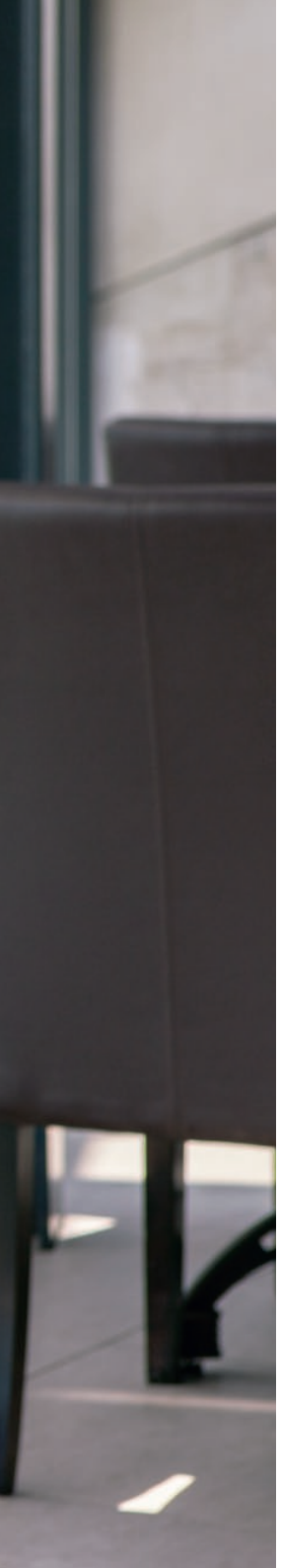

FUTURO aluminium **lift and slide patio doors**

- made with the use of the ALUPROF MB-77HS ST aluminium profile system with a thermal break;
- provide a comfortable egress to the balcony, patio or an open garden area,
- perfect solution for single-family homes, as well as apartments and hotels;
- made of three-chamber aluminium sections, leaf depth 77 mm, depth of the frame with two guides 174 mm;
- lift and slide hardware with a single-sided handle and a single-sided flush pull or a double-sided handle;
- solution with a low threshold;
- maximum dimensions of one leaf: height up to 3,200 mm and width up to 3,300 mm;
- opening frames available in two versions: 2-rail or 3-rail;
- the leaf frame and the opening frame are powder coated, optionally available in wood effect film coating or DECOR colours;

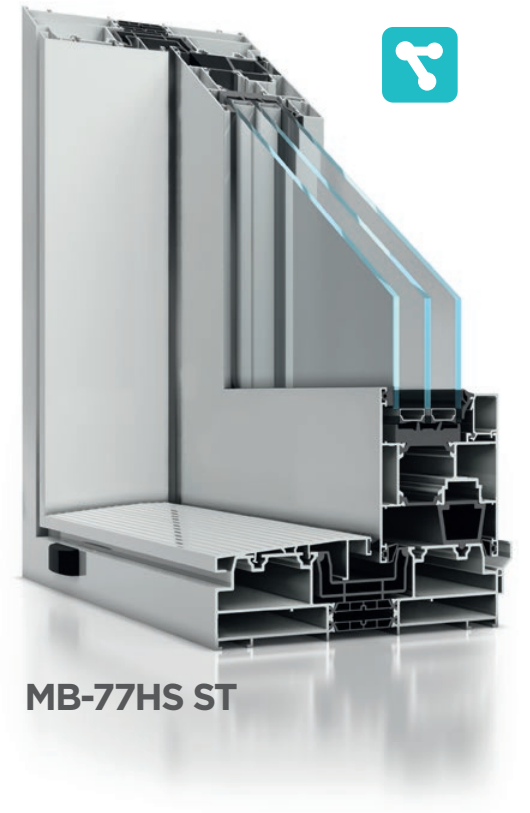

MB-77HS ST

smartCONNECTED

The smartCONNECTED technology integrates WIŚNIOWSKI products with the smart home system and lets you control them from your phone.

WIŚNIOWSKI **partition walls**

Thanks to the use of the latest system technologies, WIŚNIOWSKI offers a wide selection of external and internal walls. We manufacture walls from profiles with a thermal break, without a thermal break, and all-glass walls. The use of special fasteners enables the production of walls with any inclination angle, which allows them to be adapted to any interior.

Comfortable aluminium walls provide ease of use and comfort. Doors and windows installed in walls can be fitted with automation solutions, which considerably increases the standard of use. The use of high quality hardware and optional accessories ensures smooth operation of all the movable elements in the wall.

Numerous design solutions and a wide choice of colours provides almost unlimited options for arranging the available space. The aluminium and steel partition wall systems are compatible with the mounted doors and windows, which can be fitted with a broad array of hardware and accessories. The structures are fitted with special gasket and thermal break systems that provide appropriate tightness and thermal insulation.





WIŚNIOWSKI
façade designs

WIŚNIOWSKI façade systems make it possible to construct all-glass building façades. We also offer solutions for non-standard shapes of light multi-surface curtain walls, roofs, skylights, and other spatial structures. Various versions of glazing with safety glass in all the available types provide unlimited arrangement possibilities, while meeting all the required safety standards.

We adapt façades and skylights to the individual preferences of investors and designers. The technical office will provide all the required technical assistance from the design stage, static calculations, through the selection of the shape and colour, up to the implementation of the project. Because our products meet strict European standards, they can be used in public, investment, recreational, and residential buildings. WIŚNIOWSKI façades and skylights provide the highest tightness, acoustic, and thermal insulation parameters, as well as high strength parameters that enable the construction of safe, all-glass monumental buildings.

We offer products compliant with the building law in terms of fire protection requirements with fire ratings limiting the temperature and fire flow for: 15, 30 or 60 minutes.





Aluminium **façades**

- MB-SR50 mullion and transom façade;
- mullions and transoms enable the construction of appealing façades where just narrow division lines can be seen, looking like a uniform lattice;
- the system enables the erection of light flat curtain walls of the suspended or filling type, as well as roofs, skylights, and other structures;
- wide range of opening elements;
- broad array of glazing units, isolators, and accessories are available as well;
- thanks to special covering profiles, as well as properly shaped clamping strips and face caps, the walls can be stepped in the horizontal and vertical cross-section;

- MB-SR50 PL mullion and transom façade, where thanks to proper face caps (e.g. elliptical ones), only one direction of façade division is emphasized;
- angular connections provide freedom in the design of spatial structures;
- enables the erection of light curtain walls of the suspended or filling type, as well as roofs, skylights, and other spatial structures;
- protecting the structure from losing heat energy,
- wide range of glazings and high load-bearing capacity of the mullion and transom connection;
- broad array of opening elements, windows integrated with the façade, as well as hopper and parallel opening windows;

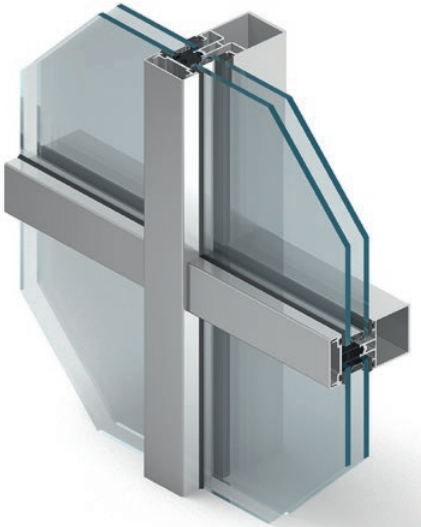

MB-SR50

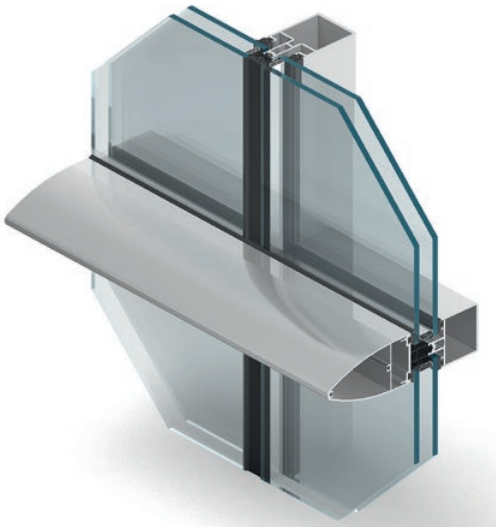

MB-SR50 PL

- MB-SR50A mullion and transom façade with an insert system;
- makes it possible to combine construction materials of various properties, different inside and outside the room;
- covering profiles of various shapes providing a large number of available façade designs,
- used both in vertical structures, glass roofs, and sunrooms;
- angular joints enable free forming of aluminium structures,
- wide range of opening elements;
- broad array of glazing units, isolators, and accessories are available as well;

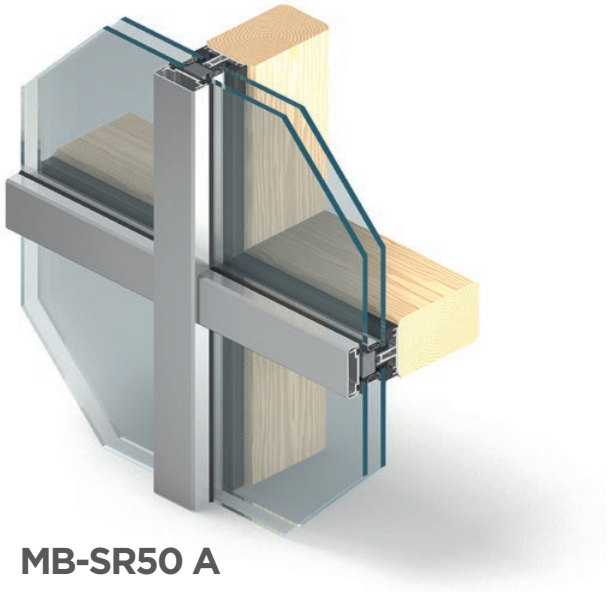

MB-SR50 A

- MB-SG50 structural façade;
- aesthetically pleasing and light structure that looks like an all-glass surface;
- glass mounted to aluminium modules with special structural silicone;
- side mounting of aluminium frames enables the installation of opaque panels on the solid wall;
- for the erection of light curtain walls of the suspended or filling type, as well as roofs and skylights;
- hopper windows do not affect the aesthetics of the façade;
- the façade is easy to keep clean;
- wide range of glazings and high load-bearing capacity of the mullion and transom connection;
- sections can be formed to erect arch structures;

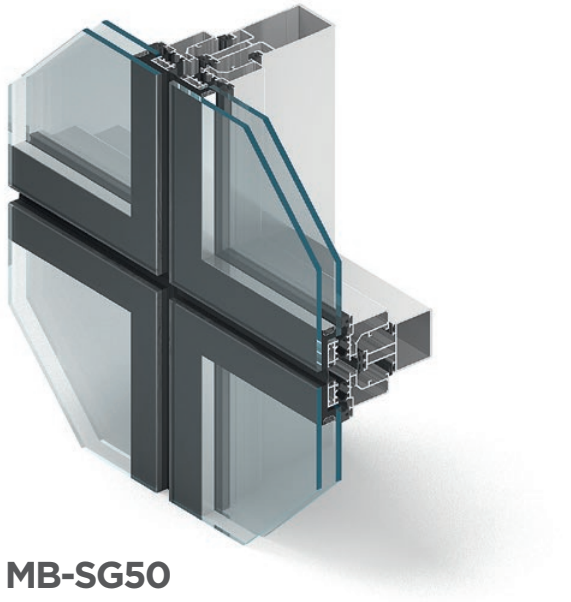

MB-SG50

Aluminium **façades**

- MB-SR50 EFEKT semi-structural façade;
- specially processed glass panes mounted using mechanical fasteners;
- uniform glass surface effect from the outside;
- for the erection of light curtain walls of the suspended or filling type;
- thermal break made of insulating HPVC material;
- shaped EPDM window gaskets;
- angular connections available;

- MB-SR50EI fire-rated mullion and transom façade;
- for the erection of fire-rated light curtain and filling walls with the EI15, EI30, EI45, and EI60 fire rating;
- various face caps available;
- angular connections up to ± 7.5° per side and erection of façades deviating from the horizontal by up to ± 15°;
- MB-78EI system doors can be installed in mullion and transom façades while maintaining the EI30 or EI60 fire rating of the entire structure;

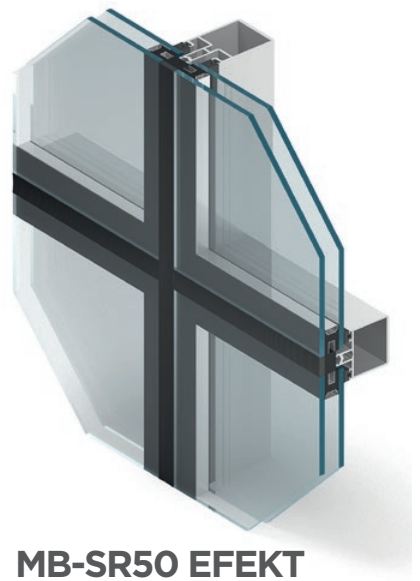

MB-SR50 EFEKT

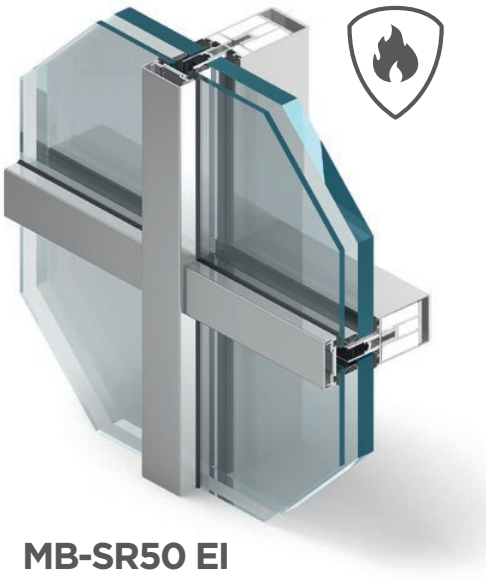

MB-SR50 EI



Steel façades

- the load-bearing capacity of façade profiles is selected based on the building design;
- JANSEN VISS TV mullion and transom façade for curtain and filling walls;
- welded profiles form a stable monolithic element;
- double system of modified EPDM gaskets creating a uniform tight partition, at the same time providing ventilation for the internal areas of the system;
- system for draining condensate and ventilation for glazing areas;
- no linear thermal bridges;
- external aluminium clamping sections;



JANSEN VISS TV

- the load-bearing capacity of façade profiles is selected based on the building design;
- JANSEN VISS TVS mullion and transom façade with increased thermal insulation for curtain and filling walls;
- sections connected by welding;
- double system of modified EPDM gaskets creating a uniform tight partition, at the same time providing ventilation for the internal areas of the system;
- system for draining condensate and ventilation for glazing areas;
- no linear thermal bridges;
- external aluminium clamping sections;

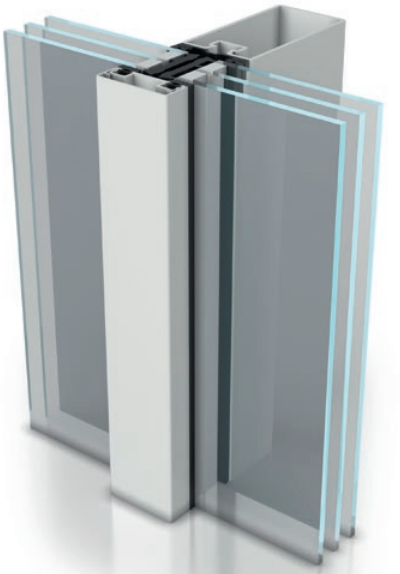

JANSEN VISS TVS





Other available **façade structures**

SKYLIGHTS AND SIDELIGHTS

- ensure natural lighting;
- various functional versions:
  – increasing interior lighting,
  – increasing interior lighting and ventilation
  – increasing interior lighting, ventilation, and smoke venting;
- available for all types of façade systems;
- angular joints enable free forming of spatial structures;
- a wide range of glazing solutions, as well as isolators and accessories makes it possible to obtain a high degree of thermal insulation;
- set of gaskets and a drainage and venting system;

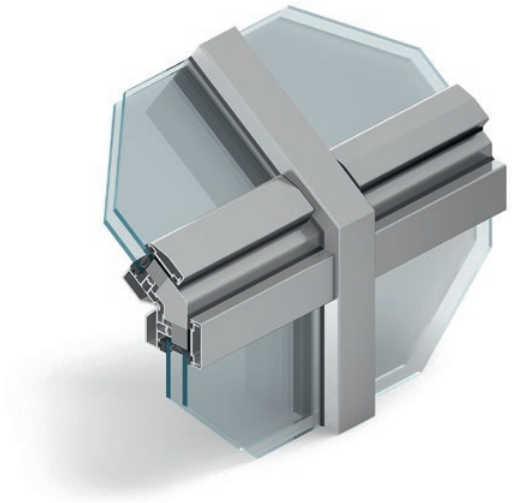

SMOKE FLAPS

- wide range of solutions – can be based on both window systems and window structures dedicated for façades;
- various window opening types – side-hung windows or awning or hopper windows with inward or outward opening, roof windows used in inclined façades or roof skylights;
- reliable and quiet mechanisms;
- compatible with various drive units, integration with power supply, control, and protection systems;
- integration with the building's HVAC system available.



FAÇADE SHUTTERS

- lower consumption of heat energy from traditional sources;
- ensure thermal comfort inside the building;
- aluminium sections 100 to 300 mm wide;
- shutter inclination angle adjustable from 0° to 45°;
- installation options: vertical and horizontal;
- can be mounted to the façade, load-bearing wall or windows;
- louvres fixed with special side caps to ensure optimal adjustment;

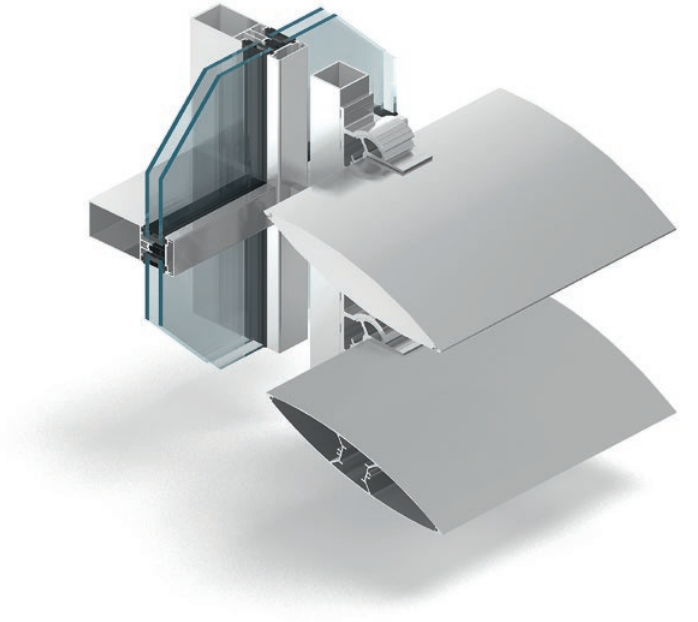

External aluminium doors WIŚNIOWSKI

Aluminium external doors by WIŚNIOWSKI are a perfect solution for customers valuing originality and unlimited possibilities of choice adapted to their own vision of their home. WIŚNIOWSKI doors provide freedom to create an individual and unique model. This is our creative approach to the individual needs of our customers.

WIŚNIOWSKI doors are an optimal solution that combines excellent thermal parameters and noise and burglary protection with functionality and beautiful design.






CREO doors
with a flush panel
RC3
BURGLAR PROTECTION
Ud
0.8
W/m² × K
THERMAL INSULATION
smart
CONNECTED



CREO doors

- door leaf 77 mm thick, with a double-sided flush panel;
- leaf frame and opening frame made of MB-86 SI+ four-chamber aluminium sections with a thermal break;
- thermal transmittance factor Ud from 0.8 W/m²K for solid doors with reference dimensions of 1,400 x 2,500 mm;
- maximum door dimensions up to 1,400 mm x 2,500 mm;
- sidelights and toplight available;
- standard accessories: three-point automatic lock with the day latch function, certified anti-burglary lock cylinder, roller hinges, stainless steel pull, handle in stainless steel colour, inside the panel three-chamber safety glass with the thickness of 77 mm U=0.6 W/m²K with a thermally insulated frame, stainless steel decorative motifs, threshold with a thermal break and thermal widening;
- broad range of optional accessories;



See our CREO and DECO door catalogue!



CREO
with thermal widening
Stropex

smartCONNECTED

The smartCONNECTED technology integrates WIŚNIOWSKI products with the smart home system and lets you control them from your phone.



DECO doors

door with an insert panel

FUNCTIONALITY

smart
CONNECTED

DECO doors

- maximum door dimensions up to 1,250 x 2,200 mm;
- standard accessories: three-point automatic lock with the day latch function, certified anti-burglary lock cylinder, surface hinges, double-sided Tokyo handle, two-chamber safety glass inside the panel, double-sided stainless steel decorative motifs, threshold with a thermal break;
- broad range of optional accessories;

DECO PLUS

- door leaf with an insert panel with the thickness of 45 mm;
- leaf frame and opening frame made of MB-86ST three-chamber aluminium sections with a thermal break;
- installation depth 77 mm;

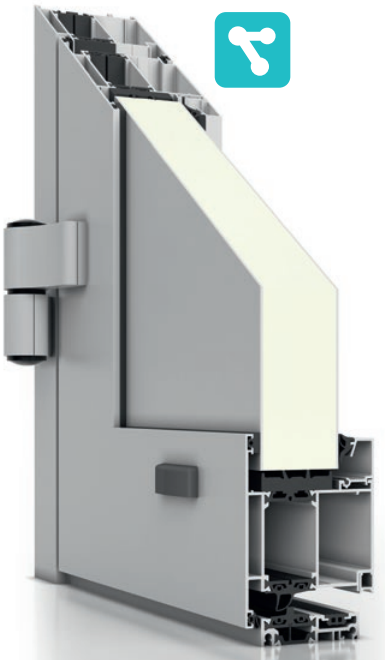

DECO BASIC

- door leaf with an insert panel with the thickness of 45 mm;
- leaf frame and opening frame made of MB-70 three-chamber aluminium sections with a thermal break;
- installation depth 70 mm;

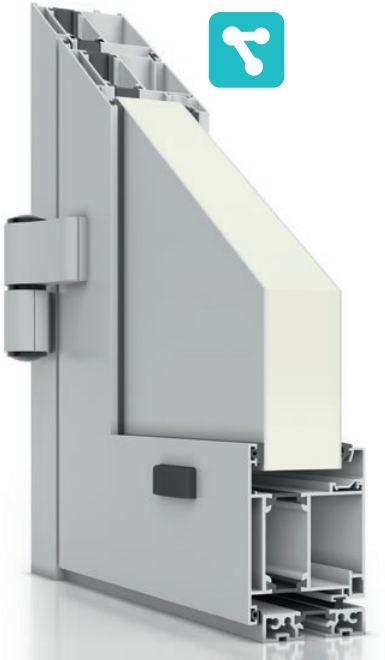

DECO LIGHT

- door leaf with an insert panel with the thickness of 35 mm;
- leaf frame and opening frame made of MB-60 three-chamber aluminium sections with a thermal break;
- installation depth 60 mm;



The smartCONNECTED technology integrates WIŚNIOWSKI products with the smart home system and lets you control them from your phone.

A wide range of colours

We offer a wide range of colours in response to the needs of our customers who expect a durable, appealing, and original look. The customer can match the door colour to the elevation, windows, and finishing elements of the building.

WIŚNIOWSKI aluminium and steel doors are available in a paint coated version in any RAL palette colour, structurally painted using the DECOR technology, which makes it possible to obtain any pattern e.g. wood effect, as well as in film coating.

We encourage our most demanding customers to take advantage of bicolour painting or the newest Home Inclusive 2.0 structural colour collection.



RAL, mat structure, DECOR, and film coating.

Accessories and options

Our vast array of accessories perfectly matches our products. The accessories are subjected to rigorous testing and inspections to ensure their top safety and reliability, as well as seamless operation with other elements of our doors, windows, and façades.



Rail door closer



Link arm door closer



Concealed door closer



Surface hinges



Roller hinges



Concealed hinges



Hinges – seamless doors



Hinges – steel profile doors



Multipoint lock with integrated hooks and deadbolts



Single-point lock – fire-rated steel doors



Auxiliary lock



Anti-burglary bolt



Sequence selector



Pushbar lever



Surface anti-panic lever



Ventilation system

Accessories and **options**



Pull



RC3/SKG*** anti-burglary handle



Stainless steel handle – steel profile doors



Stainless steel pull on – seamless doors



Aluminium threshold with a thermal break



Drop-down seal



Porthole glazing



Ventilation grille

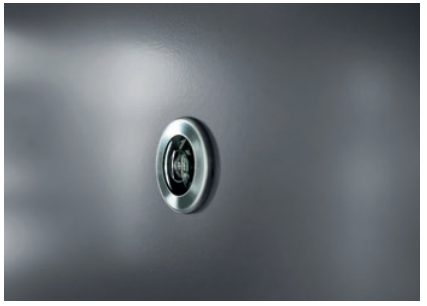

Spyhole



Electromagnetic strike



Electromagnetic armature



Automatic drive unit for swing doors



Two-channel proximity reader



Single-channel keypad



Surface code keypad



Two-channel fingerprint scanner



AirKey lock cylinder



Utility post with intercom



Example models



Aluminium **external doors**



Aluminium **internal doors**



Aluminium **fire-rated doors**



Steel **external doors**



Steel **doors without a thermal break**



Panel doors







Aluminium windows



Steel windows



Seamless **steel doors**



Fire-rated **seamless steel doors**



CREO doors



DECO doors

Reference buildings



Heron Live Hotel, Sienna





Reference buildings







HM Design – Manufaktura Mebli, Nawojowa









Reference buildings



Mansion, Warsaw













Single-family home, Nowy Sącz









TAURON Arena, Kraków


IMPACT







The Marshal Józef Piłsudski Legia Warsaw Municipal Stadium, Warsaw





Swimming pool – Perła Południa Hotel, Rytro



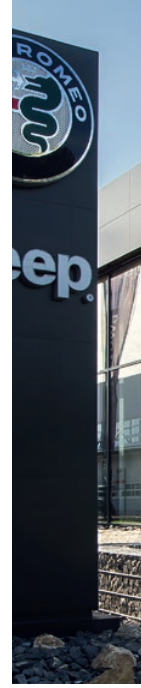

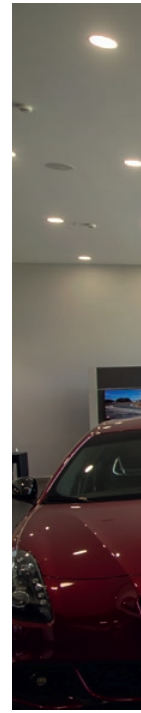

Car showroom, Kraków







Car showroom, Kraków



Car showroom, Kraków




TWOJA IMPREZA
W LUKSUSOWEJ
LIMUZYNIE
Lease&Drive 1%
Promocja Lease&Drive 1%

Reference buildings



Ignatianum University, Kraków



Regional Cable Television, Nowy Sącz







Future Processing, Gliwice







Galeria SANDECJA shopping centre, Nowy Sącz





Crystal Palace shopping centre, Žilina

Reference buildings



Social Insurance Institution (ZUS) building, Nowy Sącz



Municipal Police Headquarters, Nowy Sącz





Municipal Headquarters of the State Fire Service, Nowy Sącz

Reference buildings







ACTIVA Hotel, Muszyna







KRYNICA Hotel, Krynica

Reference buildings





Tauron, Jaworzno



Batim, Stary Sącz

WIŚNIOWSKI
HALL INCLUSIVE

The WIŚNIOWSKI Hall Inclusive collection is a comprehensive range of industrial gates, doors, and fences designed with ergonomics, safety, durability, and reliability in mind. Innovative technological solutions gave birth to exceptional functionality that meets the highest requirements for specialist facility equipment. The products enable high-capacity logistics, supporting smooth operation of your business.

The collection includes sectional, roller, and overhead doors, steel and aluminium joinery, panel fence systems, and more.



Industrial door
MakroPro

Eco seamless steel door

Sliding gate
PI 200




WIŚNIOWSKI

WIŚNIOWSKI

GATES | WINDOWS | DOORS | FENCES



DISCOVER
MORE...

www.wisniowski.com

The products shown in the photographic material often feature special equipment and do not always correspond to their standard versions • This brochure does not constitute an offer within the meaning of the Polish Civil Code. • The manufacturer reserves the right to introduce changes without notice. • NOTE: The colours shown in this brochure are for reference only • All rights reserved • Copying and use, in part or in full, is prohibited without the consent of WIŚNIOWSKI Sp. z o.o. S.K.A. • 09/25/EN